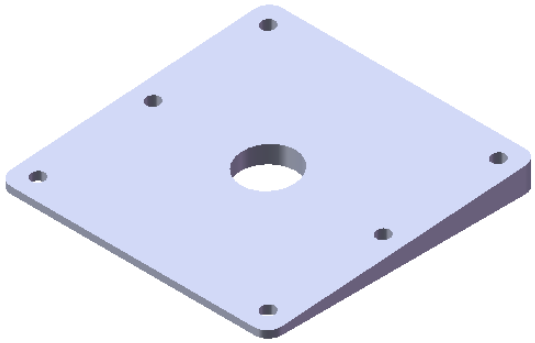

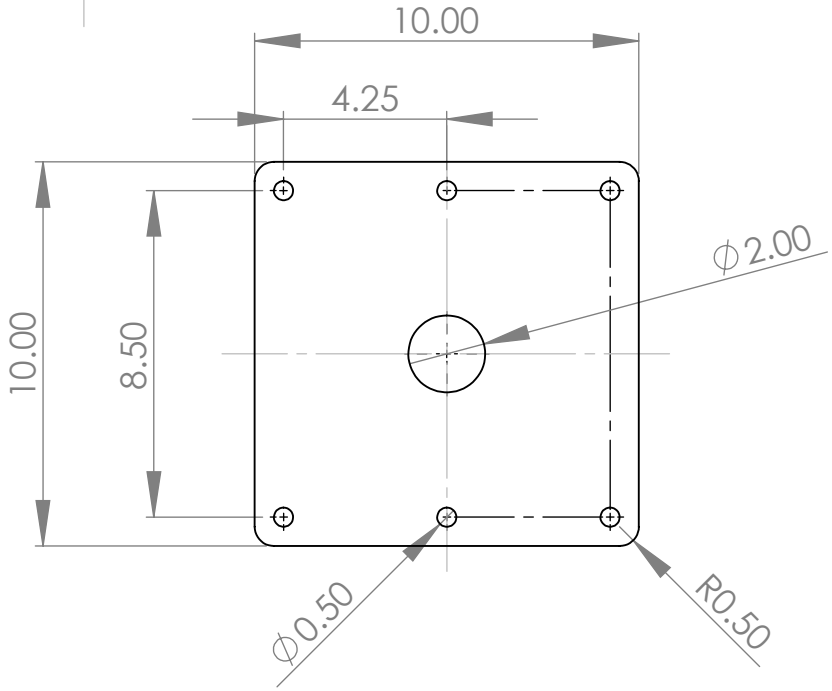

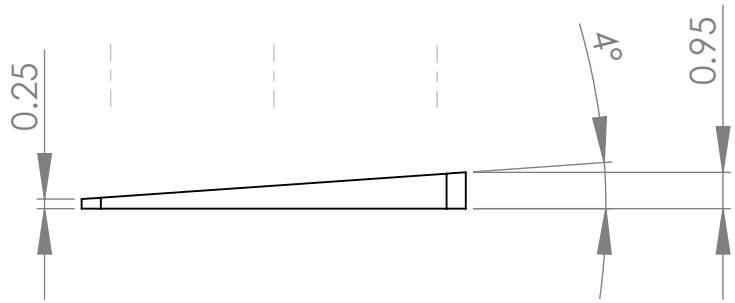

UNLESS OTHERWISE SPECIFIED: DIMENSIONS ARE IN MILLIMETERS SURFACE FINISH: TOLERANCES: LINEAR: ANGULAR:	FINISH:				DEBUR AND BREAK SHARP EDGES	DO NOT SCALE DRAWING / REVISION
	NAME	SIGNATURE	DATE			TITLE: 10x10 Base Wedge
DRAWN	JR		9/25/07			
CHK'D						
APPV'D						
MFG						
Q.A				MATERIAL:		DWG NO. PM-W4-10 / A4
				WEIGHT:		SCALE:1:5 / SHEET 1 OF 1